Waterproof 2 hole pillow block bearing units with spherical inserts IP67 P-type

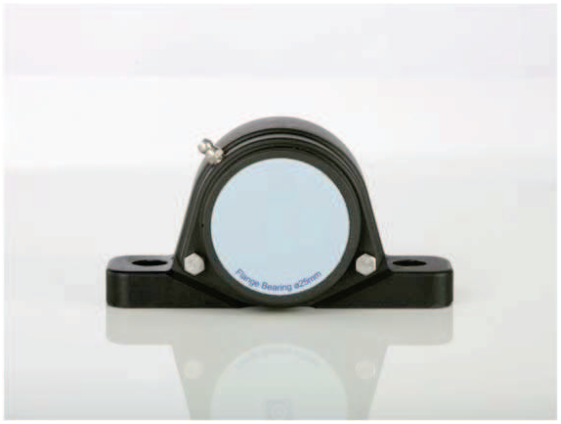



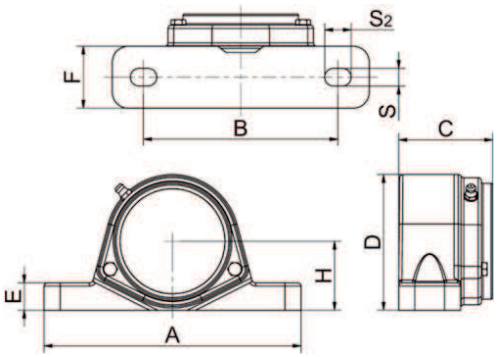

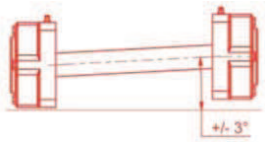

The construction permits a misalignment of the bearing, of up to +/-3°

IP67 P shaft size	Catalogue No. closed cover	Catalogue No. open cover	A	B	C	D	E	F	H	S	S2	Weight (kg)
Ø20 mm	IP67 P204 CC	IP67 P204 OC	127	95	52.0	67.0	14.0	33.5	33.3	9.0	13.5	0.43
Ø25 mm	IP67 P205 CC	IP67 P205 OC	140	105	53.0	73.0	15.0	34.5	36.5	9.0	13.5	0.51
Ø30 mm	IP67 P206 CC	IP67 P206 OC	160	121	59.0	85.0	17.0	38.5	42.9	11.0	16.5	0.77
Ø35 mm	IP67 P207 CC	IP67 P207 OC	167	127	60.0	93.0	18.0	38.5	47.5	13.0	19.5	0.99
Ø40 mm	IP67 P208 CC	IP67 P208 OC	184	137	66.0	100.0	18.0	42.5	49.2	13.0	19.5	1.30
All measurements are in millimetres. When ordering please use the catalogue no.												

Technical specifications for spherical stainless insert

Technical specifications	IP67 SSA 20	IP67 SSA 25	IP67 SSA 30	IP67 SSA 35	IP67 SSA 40
Shaft dia. (mm)	20.00	25.00	30.00	35.00	40.00
Weight (kg)	0.30	0.38	0.54	0.70	0.94
Cr (kN)	9.88	10.78	14.97	19.75	22.71
Cor (kN)	6.20	6.98	10.04	13.67	15.94
m (mass); Cr (basic dynamic load, radial); Cor (basic static load, radial)					

- FDA food grade according to the framework of regulation 21 CFR 175.300.
- EU approved according to the European Parliament and of the Council Regulation (EC) No. 1935/2004
- The flange bearings are USDA accepted and meets the NSF/ANSI/3-A 14159-1-2010 standard.